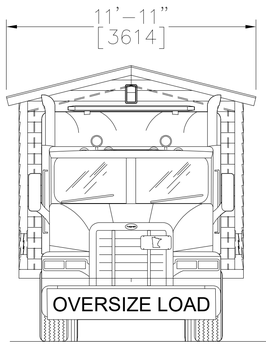

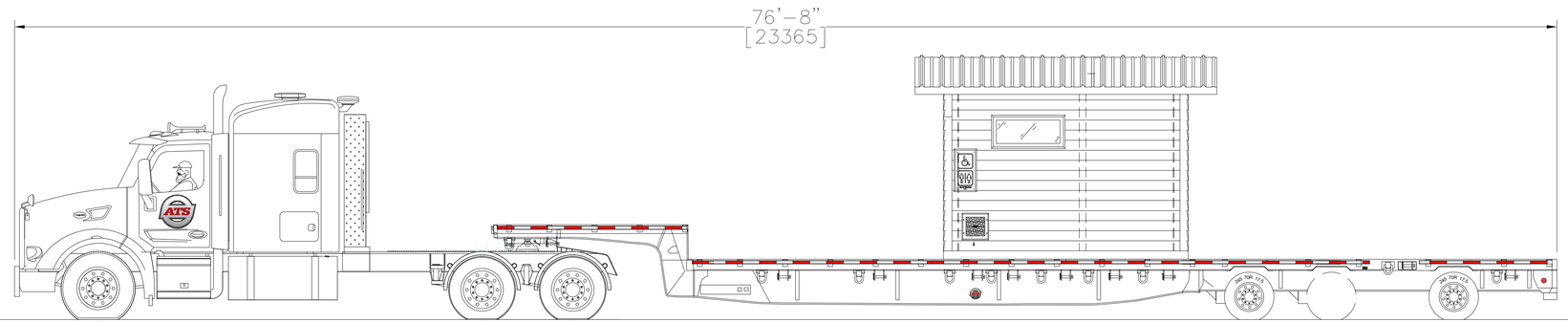

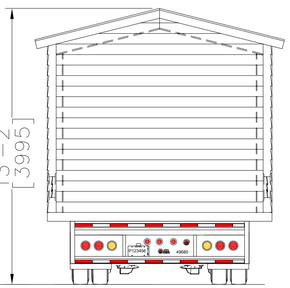

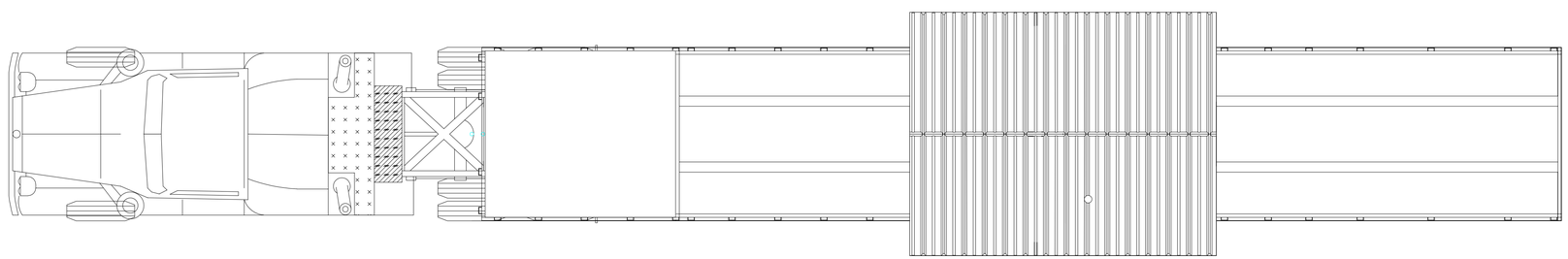

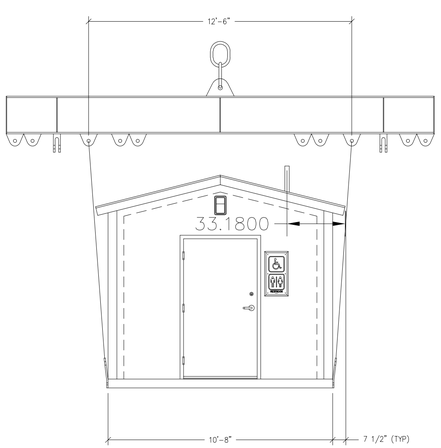

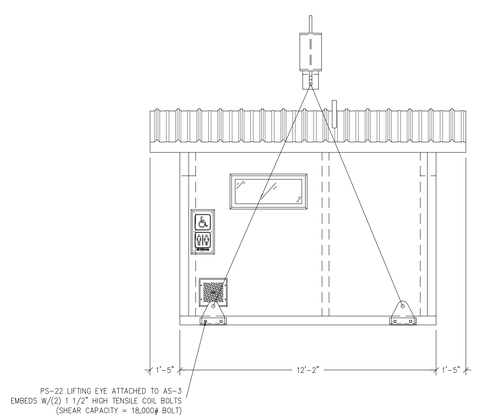

OZARK I

Building Number OZ1-251

Typical Transport Configuration

Notes:

1. Stepdeck Trailer
2. Tractor 5th wheel **0"** forward of center axle.

ATS Projects
725 Opportunity Dr.
St. Cloud, MN 56301

CREATED BY	WER
CREATED DATE	2023-04-014
SIZE	D
SCALE	NTS
REVISED BY	--
REVISION	00
REVISED DATE	--

REVISIONS

REV	DESCRIPTION	DATE

DRAWING NO. **20230414-002** MFR DWG. **OZ 1-2** SHEET 01